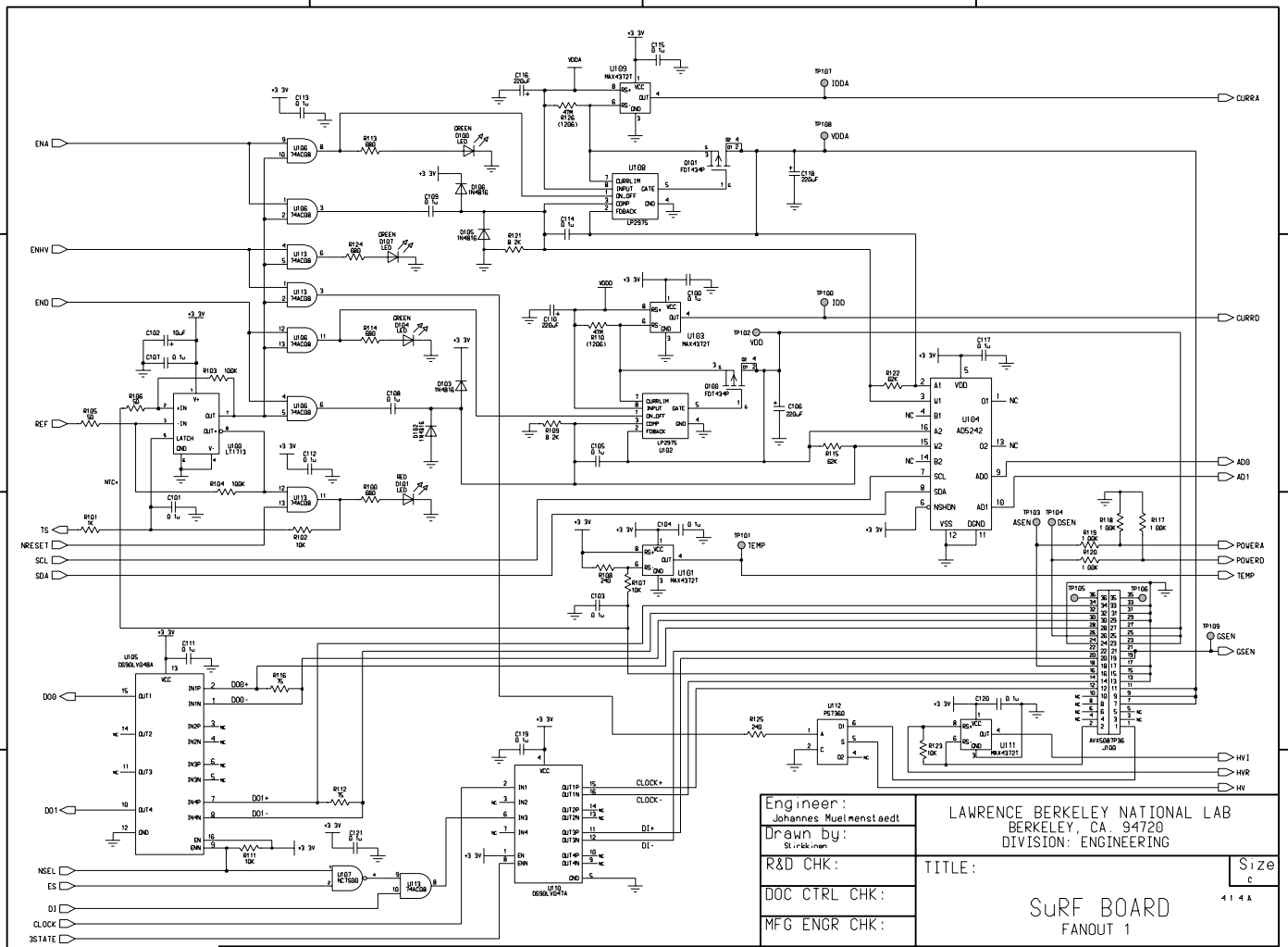

Engineer: Johannes Muelmenstaedt	LAWRENCE BERKELEY NATIONAL LAB BERKELEY, CA. 94720 DIVISION: ENGINEERING		
Drawn by: Stirkkinen			
R&D CHK:	TITLE:		Size C
DOC CTRL CHK:	SuRF BOARD FANOUT 1		4 1 4 A
MFG ENGR CHK:			
Changed by: STIRKKINEN	Date Changed: Wednesday, June 16, 2004	Time Changed: 12:15:47 pm	QA CHK:
REV 2	Drawing Number:	Page: 1	