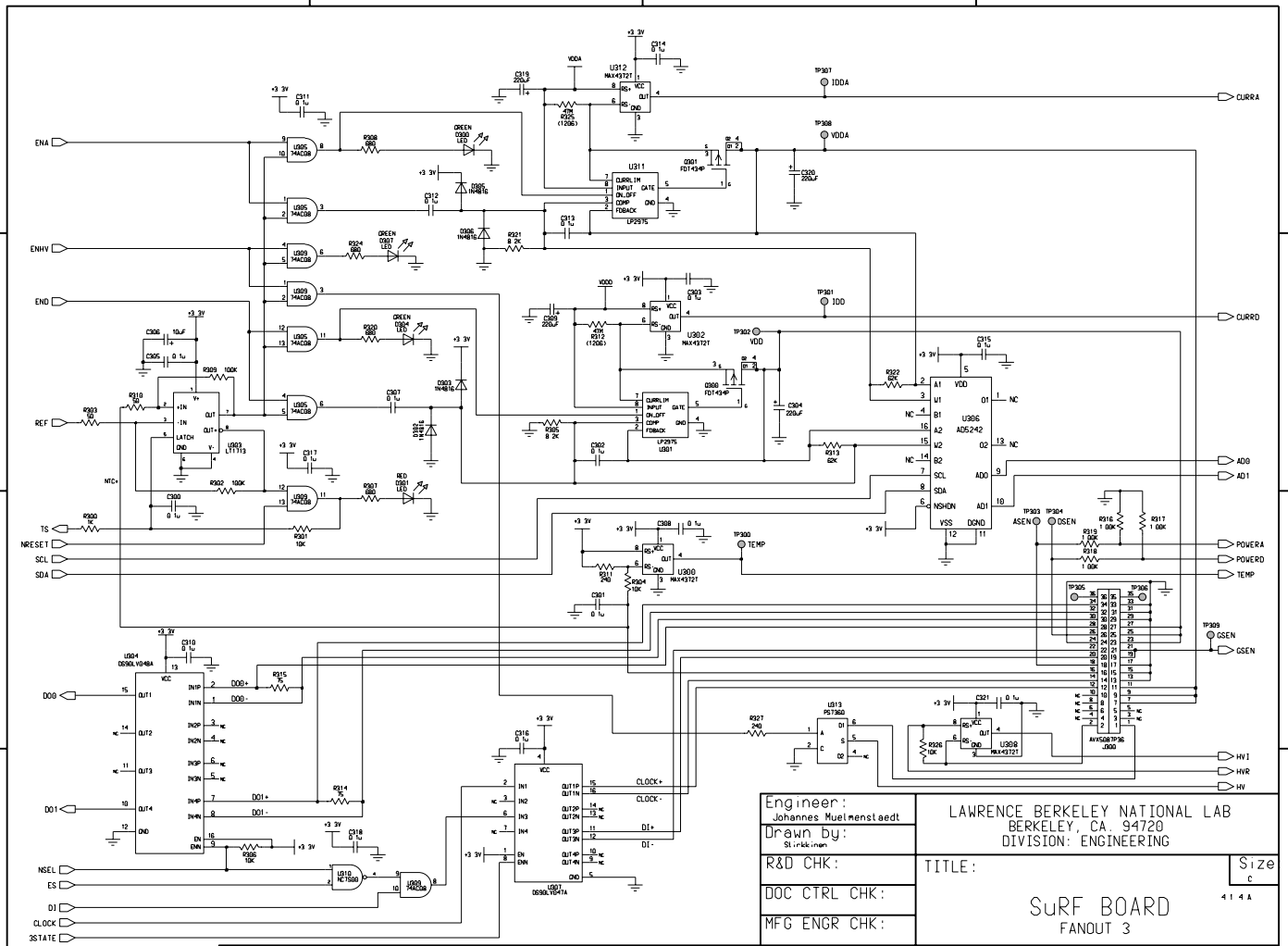

ENA
ENHV
END
REF
TS
NRESET
SCL
SDA
NSEL
ES
DI
CLOCK
3STATE
DO0
DO1
CURRA
CURRD
ADO
AD1
POWERA
POWERD
TEMP
GSEN
HVI
HVR
HV
IDDA
VDDA
IDD
VDD
ASEN
DSEN
U312 MAX4372T
U311 LP2975
U302 MAX4372T
U301 LP2975
U306 AD5242
U300 MAX4372T
U304 DS90LV048A
U313 PS7360
U308 MAX4372T
U303 LT1713
U310 NC7S00
U309 74AC08
U305 74AC08
U307 74AC08
U301 DS90LV047A
AVX5087P36 J000
Engineer: Johannes Muelmenstaedt
Drawn By: Stirkkinen
R&D CHK:
DOC CTRL CHK:
MFG ENGR CHK:
LAWRENCE BERKELEY NATIONAL LAB
BERKELEY, CA. 94720
DIVISION: ENGINEERING
TITLE:
SuRF BOARD
FANOUT 3
Size C
4 1 4 A
Changed by: STIRKKINEN
Date Changed: Wednesday, June 16, 2004
Time Changed: 12:15:47 pm
QA CHK:
REV 2
Drawing Number:
Page: 1