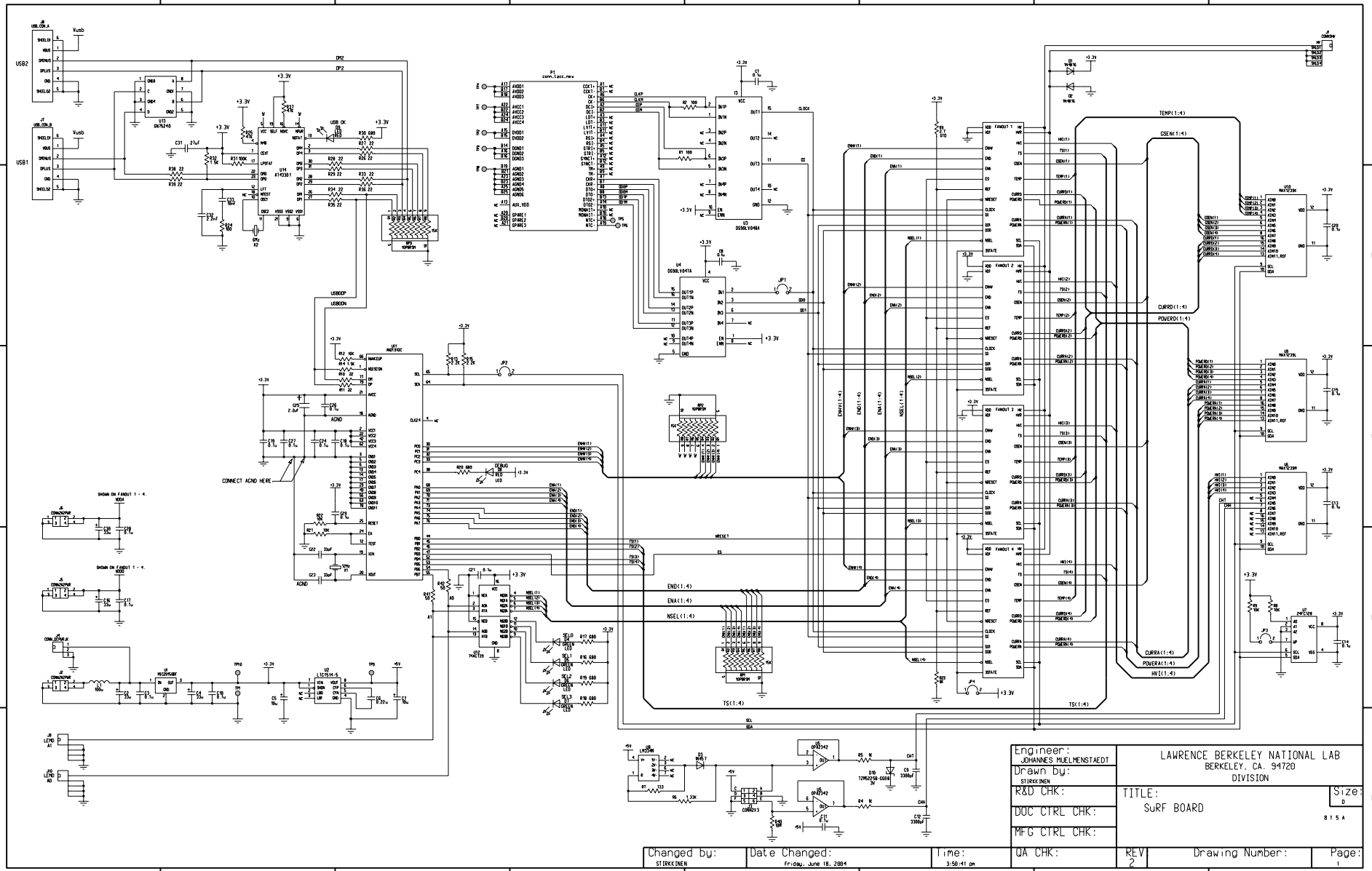
Engineer: JOHANNES MUELMENSTAEDT
Drawn by: STIRKKINEN
R&D CHK:
DOC CTRL CHK:
MFG CTRL CHK:
QA CHK:
LAWRENCE BERKELEY NATIONAL LAB
BERKELEY, CA. 94720
DIVISION
TITLE: SuRF BOARD
Size: D
8 1 5 A
REV 2
Drawing Number:
Page: 1
Changed by: STIRKKINEN
Date Changed: Friday, June 18, 2004
Time: 3:58:41 pm